EV West - AC-51/76 Curtis 1239 Hall / Prius Throttle Schematic
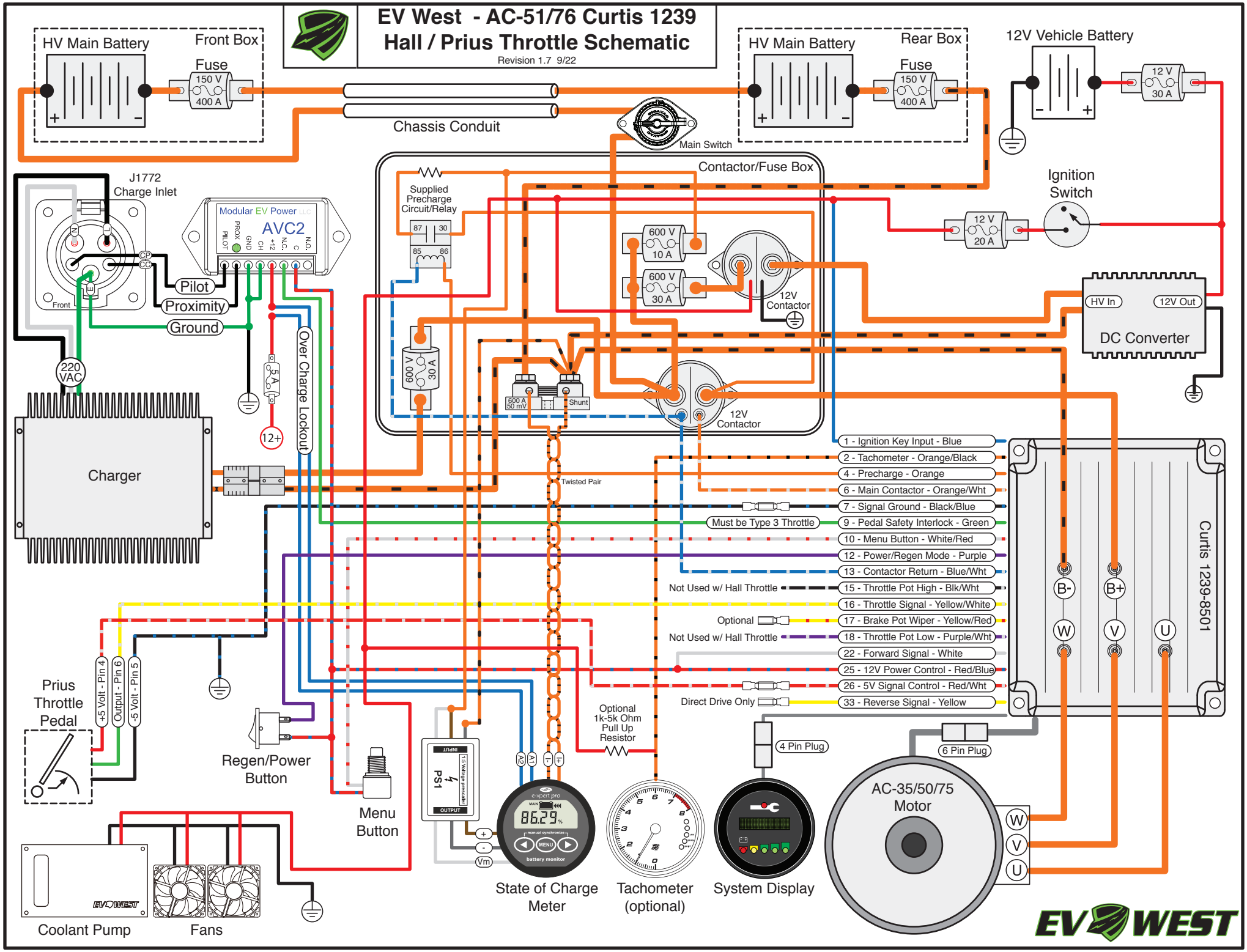
Revision 1.7 9/22